pin	A	B
2x2	2.54	5.08
2x3	5.08	7.62
2x4	7.62	10.16
2x5	10.16	12.70
2x6	12.70	15.24
2x7	15.24	17.78
2x8	17.78	20.32
2x9	20.32	22.86
2x10	22.86	25.40
2x11	25.40	27.94
2x12	27.94	30.48
2x13	30.48	33.02
2x14	33.02	35.56
2x15	35.56	38.10
2x16	38.10	40.64
2x17	40.64	43.18
2x18	43.18	45.72
2x19	45.72	48.26
2x20	48.26	50.80
2x21	50.80	53.34
2x22	53.34	55.88
2x23	55.88	58.42
2x24	58.42	60.96
2x25	60.96	63.50
2x26	63.50	66.04
2x27	66.04	68.58
2x28	68.58	71.12
2x29	71.12	73.66
2x30	73.66	76.20
2x31	76.20	78.74
2x32	78.74	81.28
2x33	81.28	83.82
2x34	83.82	86.36
2x35	86.36	88.90
2x36	88.90	91.44
2x37	91.44	93.98
2x38	93.98	96.52
2x39	96.52	99.06
2x40	99.06	101.6

REV.	ECN NO.	LOCTIONS.	DESCRIPTION	DATE	CHANGER
A			舊料號:GZ1099-XX254LX-C/D	05'-12-20	
B	ECN06123101	B	新版本	06'-11-14	

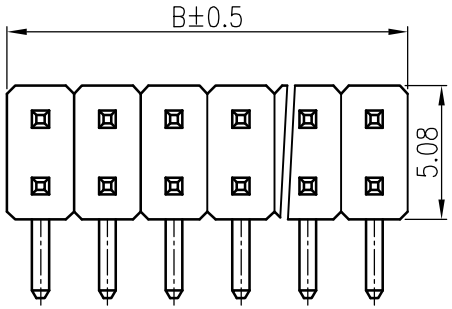

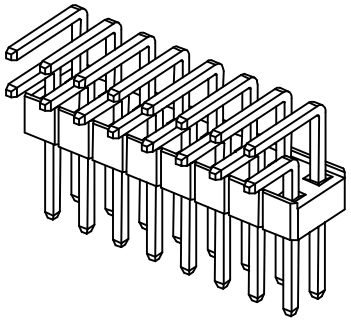

Specification

Rated Voltage:	250V AC/DC
Rated Current:	3A AC/DC
Contact Resistance:	20mohms max
Insulator Resistance:	5000Megohms/Min.
Dielectric Withstanding:	1000V AC
Operating Temperature:	-40°C~+105°C
Plastic Material:	PA6T+30%GF,UL94V-0,Black
Contact Material:	Brass
Finish:	Gold Flash Plated

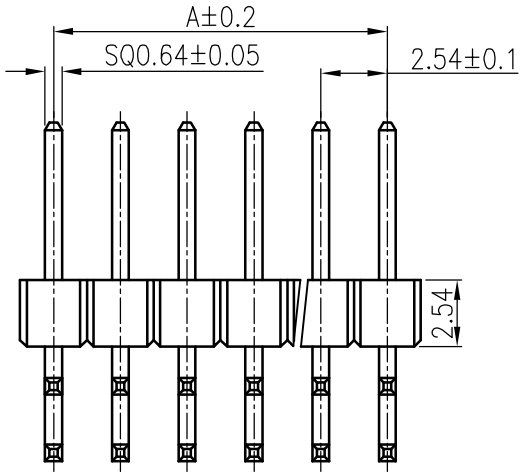

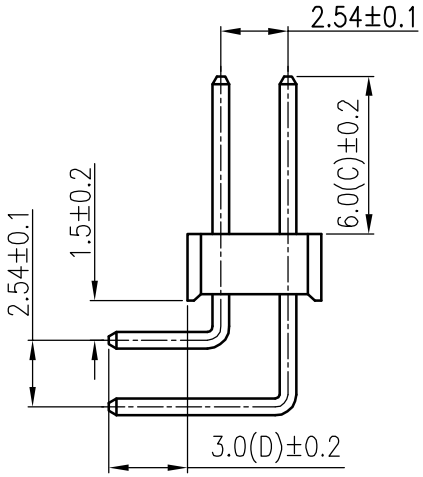

Ordering information

1-106 2 XX R G-C D B

- B:材質PA6T
- D:3.0
- C:6.0
- G:鍍金
- R:90度彎腳
- XX:02-80P
- 2:PH2.54
- 106:雙排單層
- 1:成品

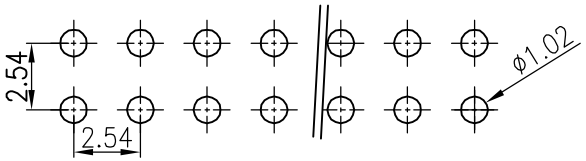

P.C.B LAYOUT

ITEM	PART NO	SPECIFICATION	Q'TY
1	2-1022XX-0254B	**2.54mm塑膠2xNP,塑膠高2.54(PA6T)**	1PCS
2	5-Q064x140R-G	**0.64四方鍍金針,90度長14.0**	NPCS
3	5-Q064x190R-G	**0.64四方鍍金針,90度長19.0**	NPCS

TOLERANCE UNSPECIFIED:
X. ±0.50
X.X ±0.25
X.XX ±0.10
X.XXX ±0.05
X.° ±2°
X.X° ±1°

DISNT 東莞得升電子機械有限公司
DISNT MECHANICAL ELECTRONIC CO.,LTD

DRAWED BY: 杨熊	DATE: 6-11-14	TITLE:	成品規格圖
		PART NAME:	2.54mm Pin Header
PROJECTION:	CHECKED BY: 何智权	DATE: 6-11-14	PART NO. 1-1062XXRG-060030B
			MOLD NO.
UNIT: mm [inch]	APPROVED BY: 陈宗渊	DATE: 6-11-14	DRAW NO. A-1-1062XXRG-060030B
SCALE:1:1 SIZE: A4			SHEET 1 OF 1