REV.	ECN NO.	LOCTIONS.	DESCRIPTION	DATE	CHANGER
A				2017/11/28	

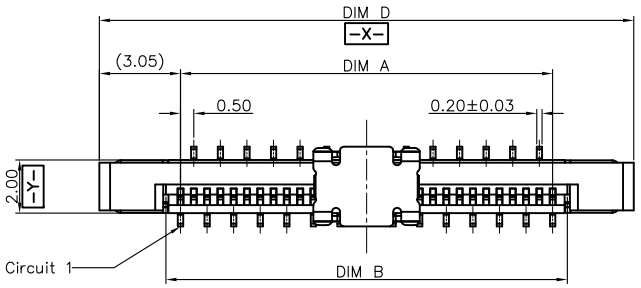

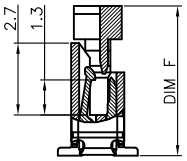

SECTION A–A
SCALE 1:1

Note:
1. Material:
   1.1 Housing: thermoplastic high temp.UL94V–0; Color: natural.
   1.2 Latch: thermoplastic high temp.UL94V–0; Color: black.
   1.3 Terminal: copper alloy.
   1.4 Fitting Nail: copper alloy.
   1.5 Cover: Stainless steel.
2. Finsh:
   2.1 Terminal:
      Underplating: Au/matt Tin overall.
   2.2 Fitting Nail:
      Underplating: matt Tin overall.
3. Product must comply HF RoHS specification.
4. Product No:

T–DFPXXSB6TG0–JF–1

- FPC 抽屜式
- XX:Pin數
- ST SMT
- B:0.5mm Pitch
- LCP
- 鍍錫
- G:接裝
- 無特殊排數
- 正腳位 直立 抽屜式

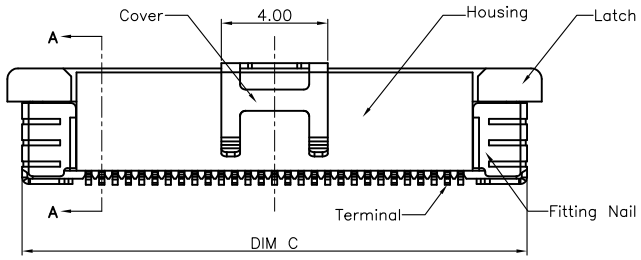

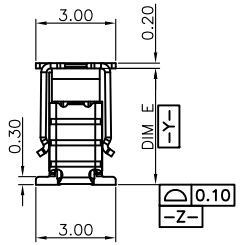

CKTS	DIM A	DIM B	DIM C	DIM D	DIM E	DIM F
4	1.50	2.60	6.50	7.60		
5	2.00	3.10	7.00	8.10		
6	2.50	3.60	7.50	8.60		
7	3.00	4.10	8.00	9.10		
8	3.50	4.60	8.50	9.60		
9	4.00	5.10	9.00	10.10		
10	4.50	5.60	9.50	10.60		
11	5.00	6.10	10.00	11.10		
12	5.50	6.60	10.50	11.60		
13	6.00	7.10	11.00	12.10		
14	6.50	7.60	11.50	12.60		
15	7.00	8.10	12.00	13.10		
16	7.50	8.60	12.50	13.60		
17	8.00	9.10	13.00	14.10		
18	8.50	9.60	13.50	14.60		
19	9.00	10.10	14.00	15.10	4.40	5.65
20	9.50	10.60	14.50	15.60		
21	10.00	11.10	15.00	16.10		
22	10.50	11.60	15.50	16.60		
23	11.00	12.10	16.00	17.10		
24	11.50	12.60	16.50	17.60		
25	12.00	13.10	17.00	18.10		
26	12.50	13.60	17.50	18.60		
27	13.00	14.10	18.00	19.10		
28	13.50	14.60	18.50	19.60		
29	14.00	15.10	19.00	20.10		
30	14.50	15.60	19.50	20.60		
31	15.00	16.10	20.00	21.10		
32	15.50	16.60	20.50	21.60		
33	16.00	17.10	21.00	22.10		
34	16.50	17.60	21.50	22.60		
35	17.00	18.10	22.00	23.10		
36	17.50	18.60	22.50	23.60		
37	18.00	19.10	23.00	24.10		
38	18.50	19.60	23.50	24.60		
39	19.00	20.10	24.00	25.10		
40	19.50	20.60	24.50	25.60		
41	20.00	21.10	25.00	26.10		
42	20.50	21.60	25.50	26.60		
43	21.00	22.10	26.00	27.10		
44	21.50	22.60	26.50	27.60		
45	22.00	23.10	27.00	28.10		
46	22.50	23.60	27.50	28.60		
47	23.00	24.10	28.00	29.10	4.95	6.20
48	23.50	24.60	28.50	29.60		
49	24.00	25.10	29.00	30.10		
50	24.50	25.60	29.50	30.60		
51	25.00	26.10	30.00	31.10		
52	25.50	26.60	30.50	31.60		
53	26.00	27.10	31.00	32.10		
54	26.50	27.60	31.50	32.60		
55	27.00	28.10	32.00	33.10		
56	27.50	28.60	32.50	33.60		
57	28.00	29.10	33.00	34.10		
58	28.50	29.60	33.50	34.60		
59	29.00	30.10	34.00	35.10		
60	29.50	30.60	34.50	35.60		

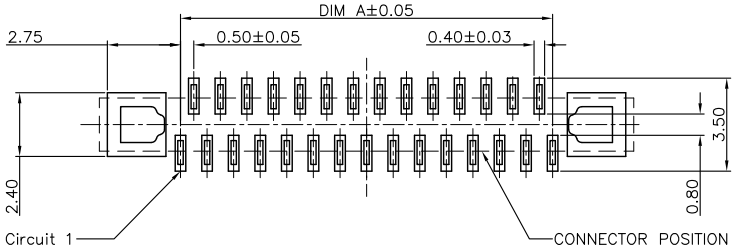

RECOMMENDED P.C.B PATTERN LAYOUT

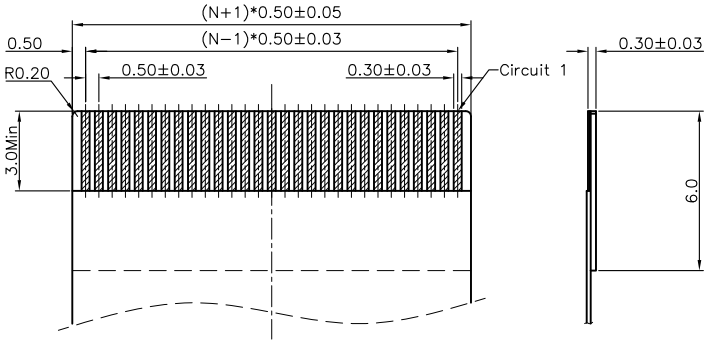

RECOMMENDED FPC/FFC DIMENSION

TOLERANCE UNSPECIFIED:
X. ±0.50
X.X ±0.25
X.XX ±0.15
X.XXX ±0.05
X.° ±2°
X.X° ±1°

DISNT 得升電子股份有限公司
DISNT ELECTRONIC CO.,LTD

DRAWED BY: 阮志龍	DATE: 2017/11/28	TITLE: 成品規格圖	
		DESCRIPTION: 0.5Pitch H=4.4&4.95 FPC ZIF S/A Normal Type3 SMT CONN	
PROJECTION:	CHECKED BY: 何智权	DATE: 2017/11/28	PART NO. T-DFPXXSB6TG0-JF-1
			MOLD NO.
UNIT: mm [inch]	APPROVED BY: 陈宗渊	DATE: 2017/11/28	DRAW NO.
SCALE:1:1 SIZE: A4			SHEET 1 OF 1